REVISIONS			
REV	DESCRIPTION	DATE	APPROVED

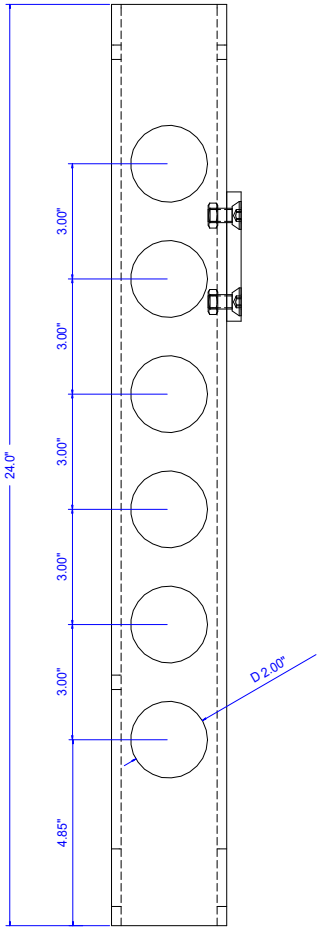

MATERIAL
- 24" 6061 ALUMINUM 3x3x0.25" SQUARE TUBE

NOTES
DIMENSIONS ARE FOR LENCO 102 STANDARD DUTY ACTUATOR.
EXTREME DUTY 102 ACTUATOR MAY BE USED, BUT POSITION OF PIVOT TAB MUST BE ADJUSTED

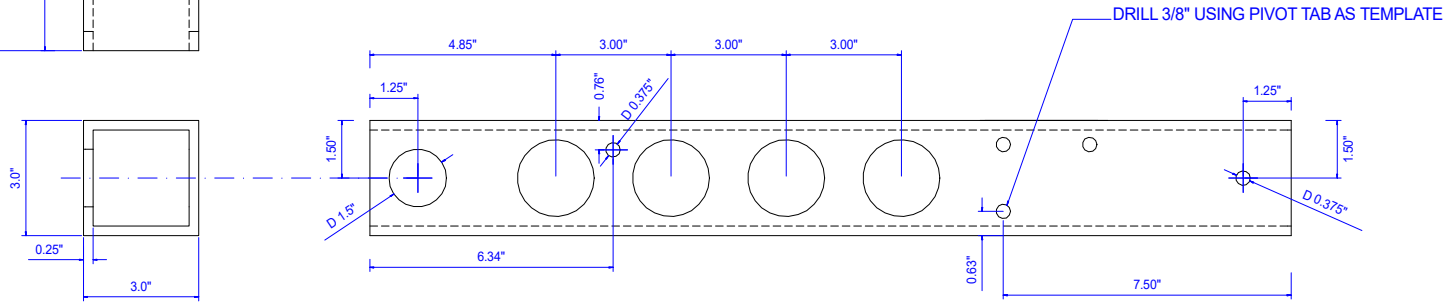

DWG NO.	DESCRIPTION	DATE
20002	UPPER ARM	8 AUG 20
SCALE 1:5	DRAFTSMAN SMYTH	SHEET 1/1